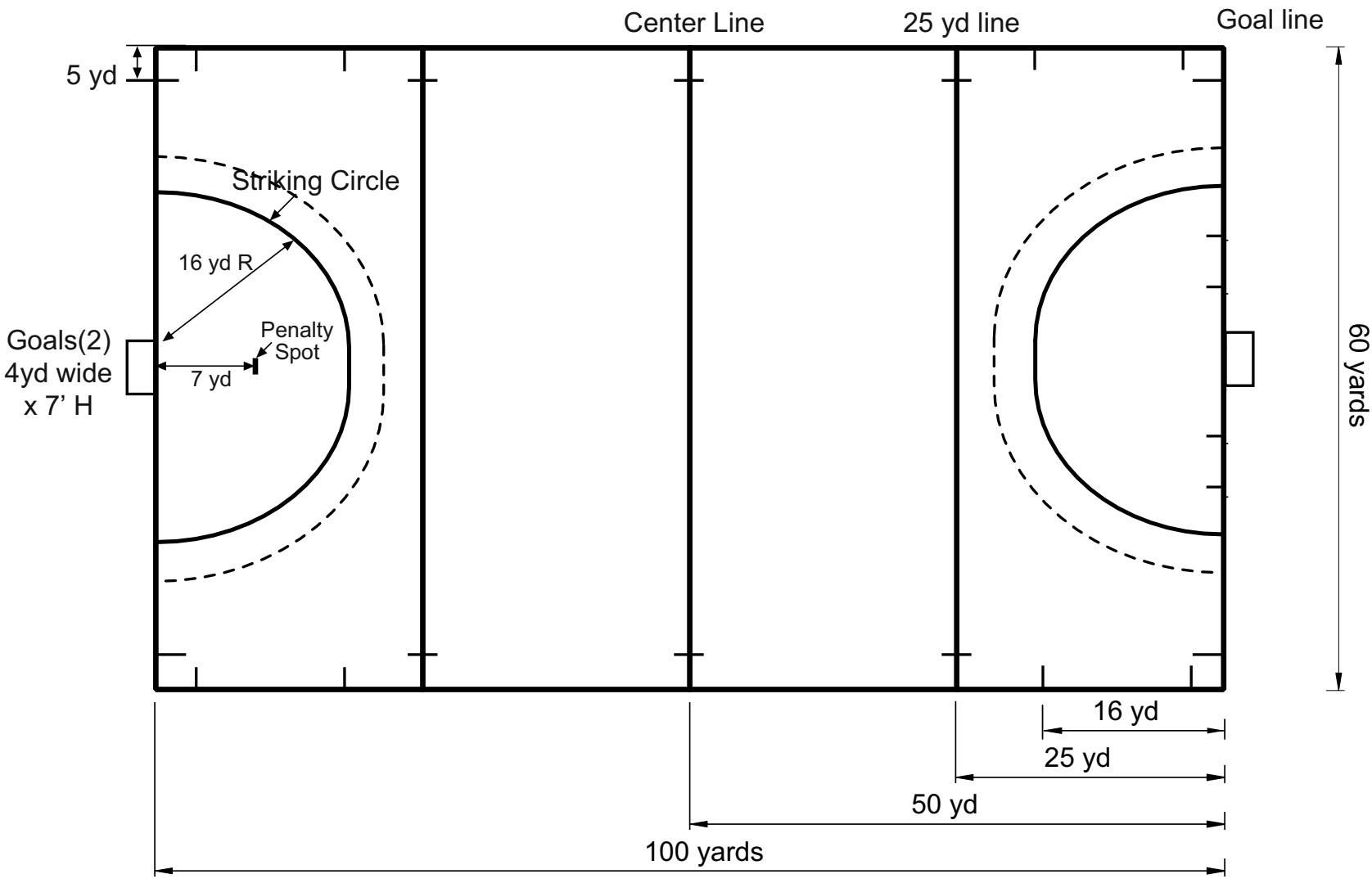
Center Line
25 yd line
Goal line
5 yd
Striking Circle
16 yd R
Goals(2)
4yd wide
x 7' H
Penalty
Spot
7 yd
60 yards
16 yd
25 yd
50 yd
100 yards